Tofco CPP Limited. Meadowfield Ind Est, Ponteland, Northumberland, NE20 9SD. TEL: 01661 860001 FAX: 01661 860002 e-mail: info@tofco.co.uk web site: www.tofco.co.uk

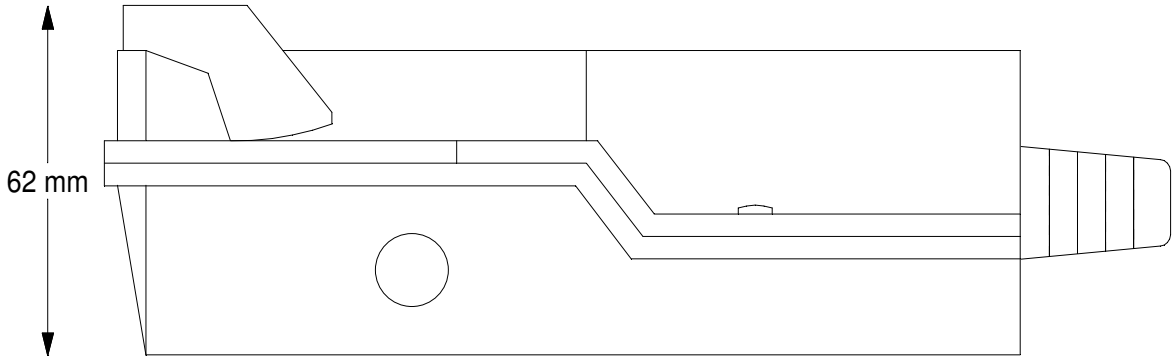

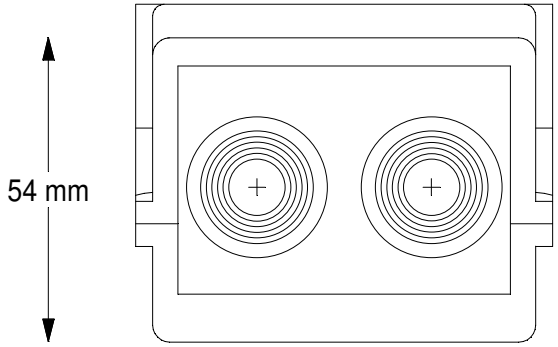

ABS + 2 x 20mm Grommets

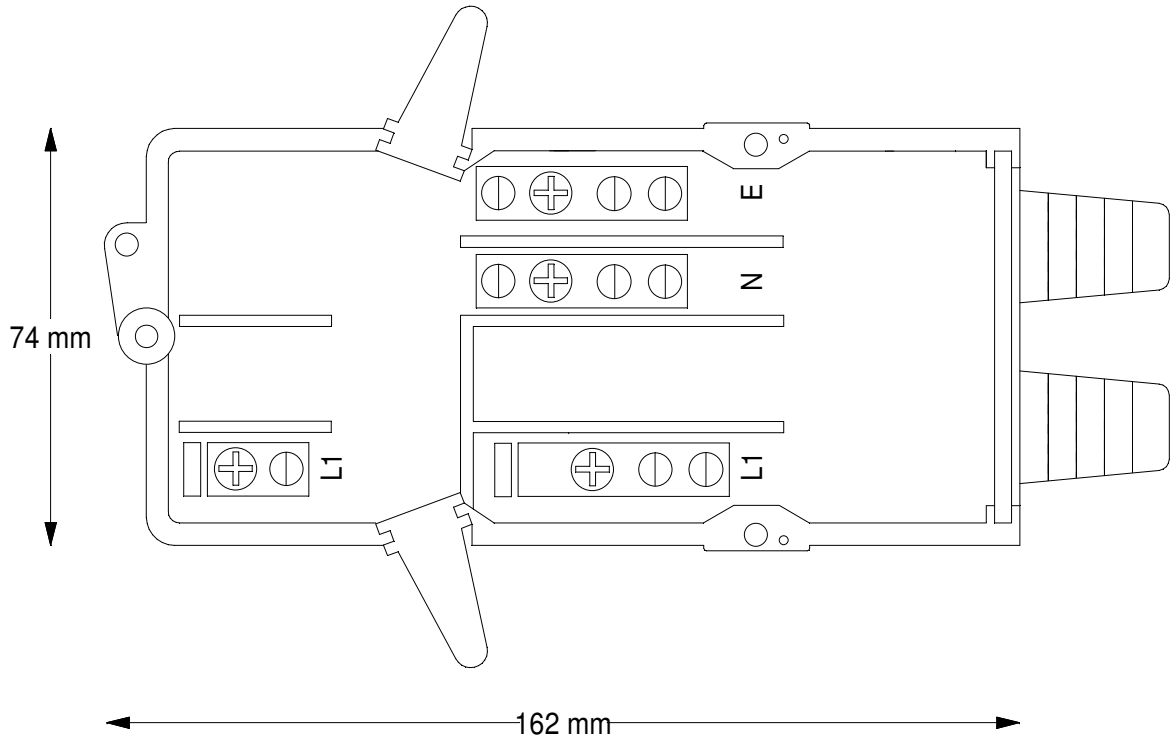

REVISION No.	DESCRIPTION OF MODIFICATION	DATE	TOFCO CPP LTD	TITLE: F144SP SINGLE POLE 1 FUSE CUT-OUT C/W EARTH & ABS CABLE ENTRY	SHEET	DRAWN	CHECKED	APPROVED	DATE
					1 of 1	DGB			29/03/12
			THIS DOCUMENT IS THE PROPERTY OF TOFCO CPP LIMITED AND IS SUPPLIED IN CONFIDENCE. IT MUST NOT BE USED FOR ANY PURPOSE OTHER THAN THAT FOR WHICH IT IS SUPPLIED, AND MUST NOT BE REPRODUCED WITHOUT PERMISSION IN WRITING FROM THE OWNER.	PART No. F144SP/E3 + ABS	DRAWING No. F144SP RANGE			