TPSK-ZV-FP SYSTEM

TPSK-ZV-FP - Tofco Passive Safety Kit – ZERO VOLTAGE – Feeder Pillar

The TPSK-ZV-FP has been designed to give individual circuit control that provides complete electrical disconnection from the power supply upon a vehicle collision of a column, post or sign.
Complete electrical disconnection is achieved in the feeder pillar within the time constraints as specified in BSEN 12767:2019.

Each column, post or sign is fitted with a Tofco Isolator or Fuse Unit allowing looped & end of line terminations of SWA cables.
The independent Tofco Zero Voltage (ZV) Circuit Sensor is fitted above the Isolator or Fuse Unit and is wired back to the ZV Controller located within the feeder pillar.

Upon a vehicle collision, the ZV sensor will activate the ZV Controller housed within the feeder pillar and disconnect all power to the affected circuit within the 0.4s.

Column Isolators / Fuse Units to BSEN 60947-1 and BS7654 will be supplied to meet the specification and allow for termination of SWA supply cables.

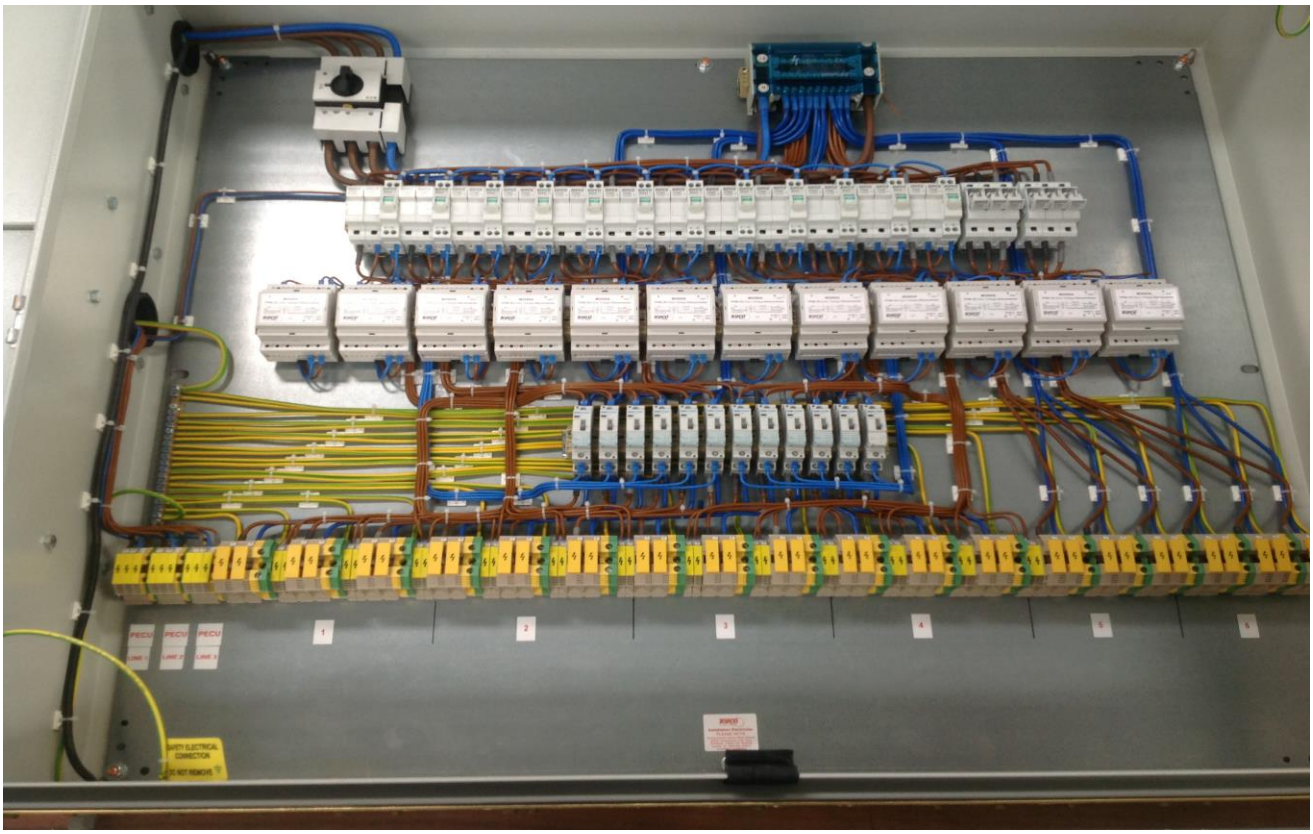

Typical installation
Outgoing Sensor Cables

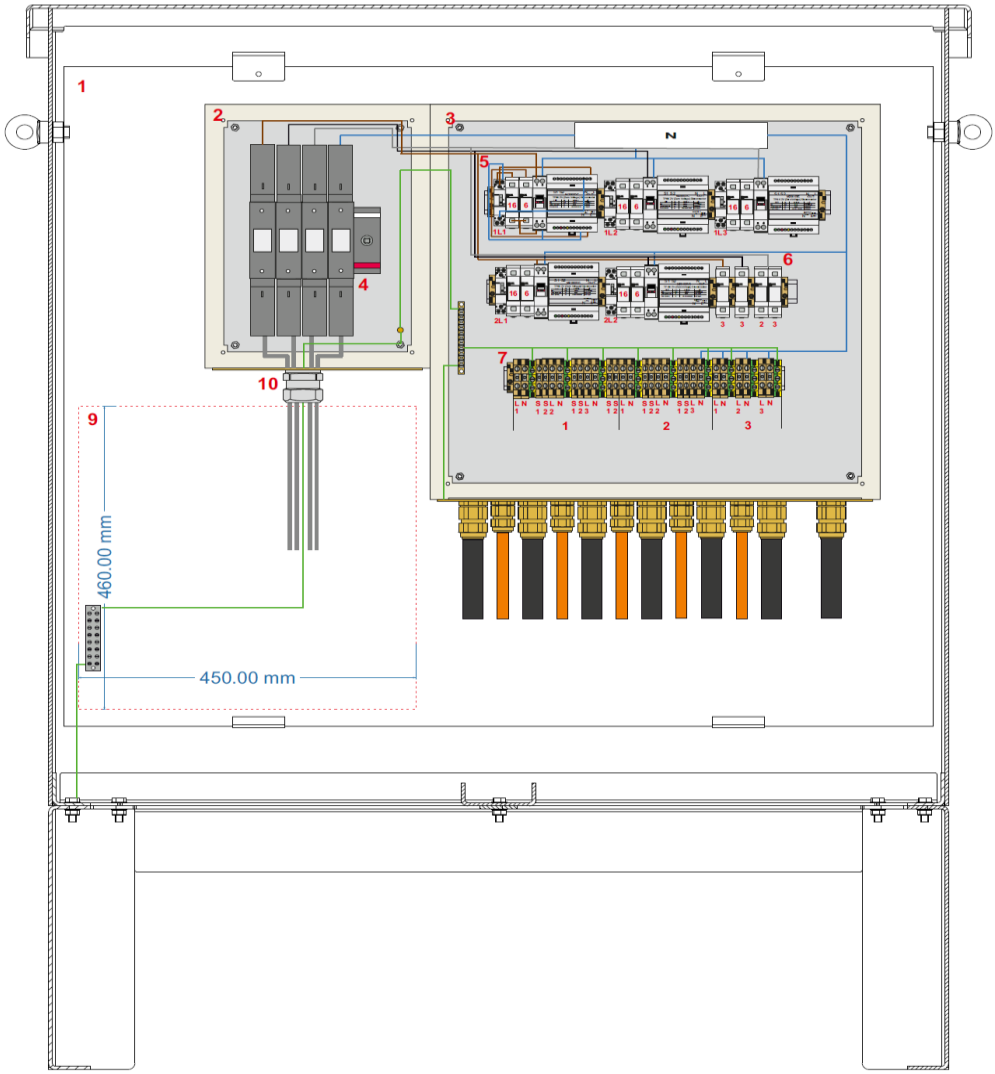

Column Sensor Cables – Looped in each Column via Sensor

The TPSK-ZV-FP system incorporates the same Zero Voltage technology that is used in our TPSK ZV underground chamber system offering the following features and benefits.
FEATURES & BENEFITS TPSK-ZV-FP

Sensor:
1) Feature: Zero Voltage switch
Benefit: Activated by collision but not to vibration.

2) Feature: Compact sensor
Benefit: Reduced on-site installation time. Comes pre-wired to sensor cable termination box.

3) Feature: Non-mercury based sensing technology.
Benefit: Environmentally "friendly". RoHS Compliant.

Disconnection System:

1) Feature: Disconnects power to the lighting column / structure on vehicle collision.
Benefit: Column is electrically safe after collision. No risk to emergency services. Disconnects within the 0.4s time scale.

2) Feature: Disconnects all Live and Neutral to the column when cable to column breaks.
Benefits: No risk to emergency services from live end of connector.

3) Feature: No low voltage sensing lines required.
Benefit: Simple to install. No low voltage power supply required.

4) Feature: Lighting Panel supplied pre-wired within Tofco steel feeder pillar.
Benefit: Easy to install, factory test certificate.

5) Feature: Automatic restart after power fail.
Benefits: No need for manual reset.

6) Feature: LED indication.
Benefit: Installation and fault detecting easy. Indicates that system is live, that the sensor is operational or if the ZV Disconnection system has been activated.

8) Feature: Special sensor filter circuit.
Benefit: Removes risk of spurious triggering from traffic vibration, electronic ballasts or vandal attack (e.g. kicking the lamp column).

FEEDER PILLAR CONSTRUCTION
The TPSK-ZV-FP come pre-wired to meet the client's specification and can provide a combination of Passive and Non-Passive outgoing circuits.
Panel Assembly Drawings (PAD) will be provided for client approval prior to manufacture.

- Pillar sized to accommodate all internal switchgear and DNO supply if required
- IP66 Internal enclosures to house panel components & ZV Disconnection System
- Main incoming Isolation device
- Protective devices for outgoing circuits.
- Auxiliary circuits – heater, light, REC socket, thermostat
- Gland plate for SWA termination
- Internal wiring and blocks sized to suit
- Factory test certificate & PAD drawing supplied

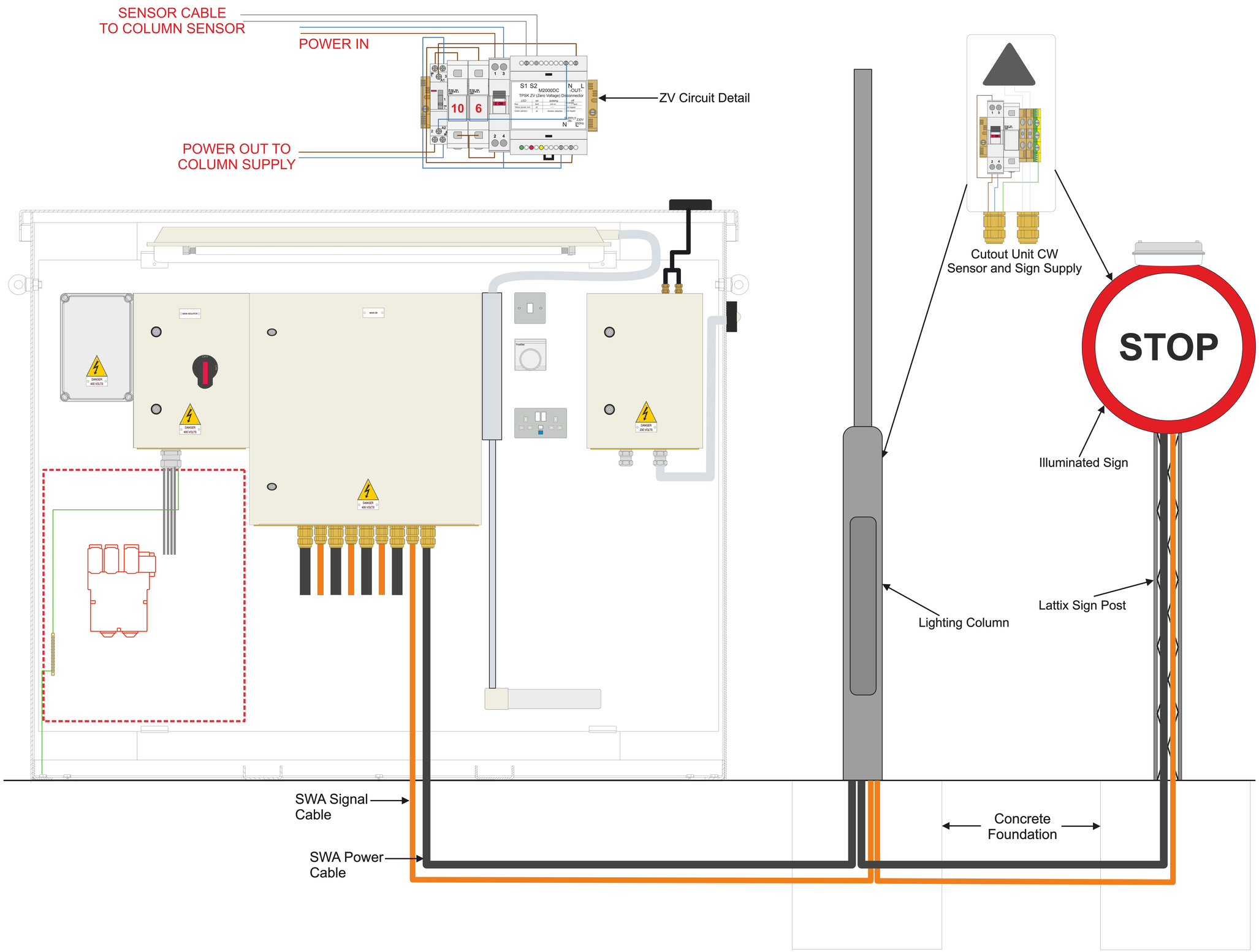

Notes:

1. Standard Tofco M2000DS Disconnection System Installed In Feeder Pillar
2. Unit Provides Circuit Discnnection in Under 0.4ms. Standard Switch Setting Enables Unit To Switch Off Monitored Structure If a Malfunction Is Detected.
3. Column/Sign Sensor Installed In Cutout Unit
4. More Than One sensor Unit Can Be Installed On Circuit

ALL ELECTRICAL WORKS ARE IN ACCORDANCE TO BS7671 (LATEST EDITION) AND ELECTRICITY AT WORK REGULATIONS.

REV	DESCRIPTION OF MODIFICATION	DATE

Tofco CPP Ltd
Meadowfield Inds Estate
Ponteland
Northumberland
NE20 9SD

01661 860001

FP PART No.
-

DRAWING TITLE:
Standard Detail M2000DC
Above Ground Passive

CLIENT DRG No.

REV.

DRAWING No.
TPSK Above Ground

SHEET	DRAWN	CHECKED	APPROVED	DATE
1 of 1	JP	JP	JP/KD	31/03/20

THIS DOCUMENT IS THE PROPERTY OF TOFCO CPP LIMITED AND IS SUPPLIED IN CONFIDENCE. IT MUST NOT BE USED FOR ANY OTHER PURPOSE OTHER THAN THAT FOR WHICH IT IS SUPPLIED, AND MUST NOT BE REPRODUCED WITHOUT PERMISSION IN WRITING FROM THE OWNER.

Meadowfield Ind Est, Ponteland, Northumberland, NE20 9SD
Tel: 01661 860001 Fax: 01661 860002 e-mail: info@tofco.co.uk web site: www.tofco.co.uk

M2000DC ZV ELV DISCONNECTOR ABOVE GROUND PASSIVE PILLAR

- Tofco Zero Voltage 12VDC ELV Disconnector
- Tilt & Collision Sensor Interface
- DIN rail mounting
- <400ms second Disconnect if column is impacted
- RoHS Compliant

Connections & Indicators

Switched Output		x SPNO (Live + Neutral 230VAC / 50Hz)
Contact Material		$AgSnO_2$ (for lamp loads - 25A max inrush)
Switched Sensor Output		12VDC for CDU Sensor. Internally isolated in trip mode
Power Supply		230VAC Live & Neutral
LED Indicators	Red	Pulsing = Unit Working; Off = No Power or Fault;
	Yellow	On = Power Out OK; Off = Unit tripped
	Green	On = Unit OK; Flashing = Vibration detected; Off = Unit tripped

Description of Operation M2000DC ELV 12V SENSOR SYSTEM:

The **M2000DC** module is a bespoke monitoring device, design to work with the TOFCO Collision Detector Unit - CDU and will only operate in the event of a significant impact, wind and traffic vibration are filtered out by the unique time delay facility.

The TOFCO **TPSK-ZV-FP** Feeder Pillar System use the M2000DC ELV & CDU technology to provide ***"Complete Electrical Isolation"*** of an impacted column,sign or pole.

Extra Low Voltage 12VDC is supplied to the CDU by the M2000DC, the return from the sensor goes to the sensor input. When the CDU goes open circuit indicating an impact, the M2000DC detects the opening of the CDU and disconnects its output from the supply within the time constraints of BSEN 12767 - <400ms.

The sensor supply & return is also disconnected, turning off the supply and making the circuit completely isolated.

The M2000DC is reset by turning off and re-applying the supply to the module. If the CDU is still open circuit indicating a knock down the M2000DC will not reset.

Meadowfield Ind Est, Ponteland, Northumberland, NE20 9SD
Tel: 01661 860001 Fax: 01661 860002 e-mail: info@tofco.co.uk web site: www.tofco.co.uk

M2000DC

TPSK ZV LV Disconnector

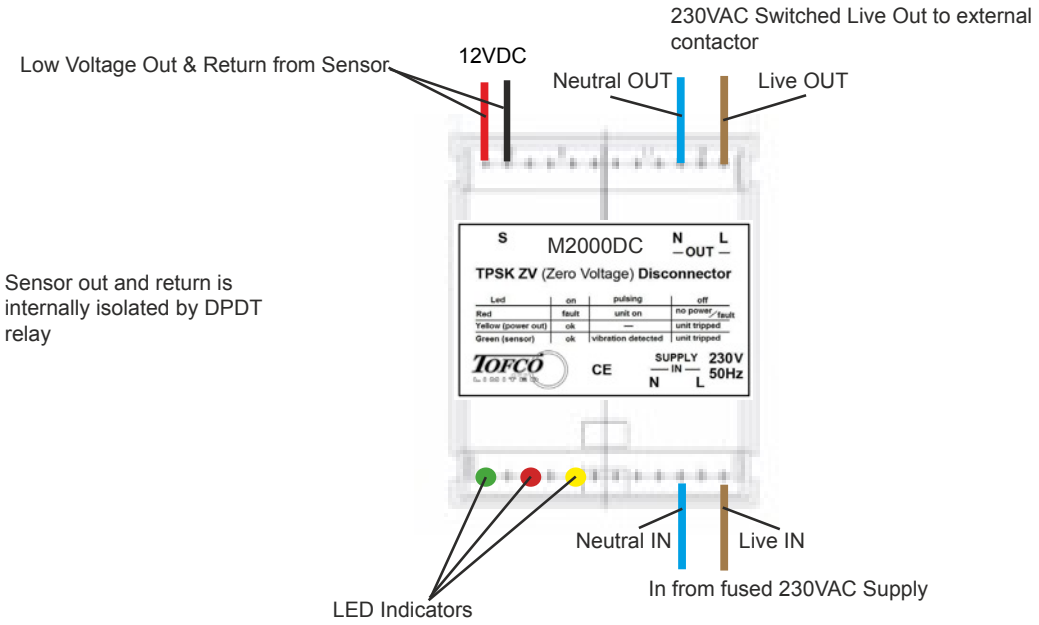

Wiring Diagram

Note: Care should be taken to not over tighten the screw terminals

Maximum screw torque = 0.3Nm

Dimensions:

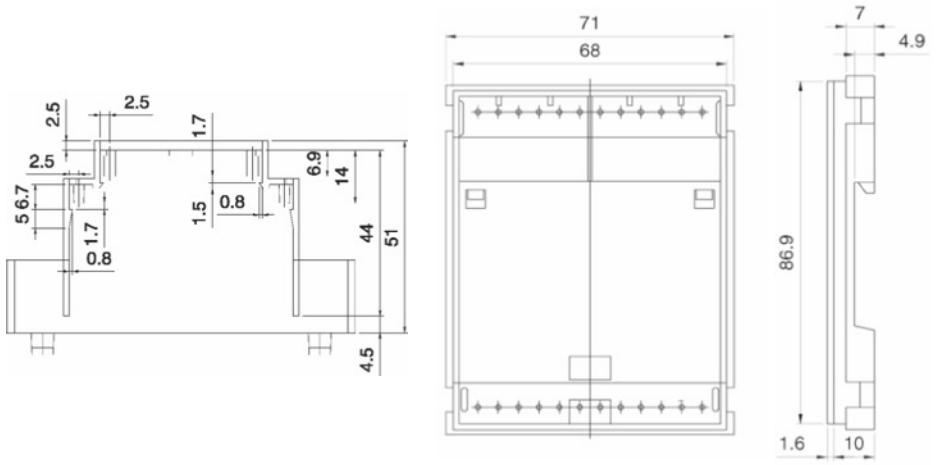

All dimensions are in mm.

Acceptable DIN Rail

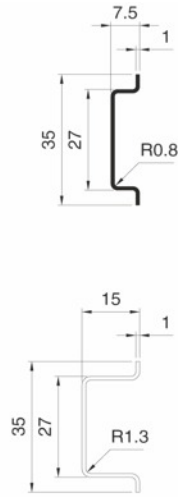

All dimensions are in mm.

Tofco CPP Limited. Meadowfield Ind Est, Ponteland, Northumberland, NE20 9SD. TEL: 01661 860001 FAX: 01661 860002 e-mail: info@tofco.co.uk web site: www.tofco.co.uk

1 Way (End Of Line)

TOFCO sensor colum termination unit. Consisting of a cutout unit with Impact Sensor mounted above housed on a plastic enclosure 92mm H x 92mm W x 65mm D

2 Way (Looped)

TOFCO sensor colum termination unit. Consisting of a cutout unit with Impact Sensor mounted above housed 0n a plastic enclosure 92mm H x 92mm W x 65mm D

3 Way (Looped + Spur)

TOFCO sensor colum termination unit. Consisting of a cutout unit with Impact Sensor mounted above housed 0n a plastic enclosure 92mm H x 92mm W x 65mm D

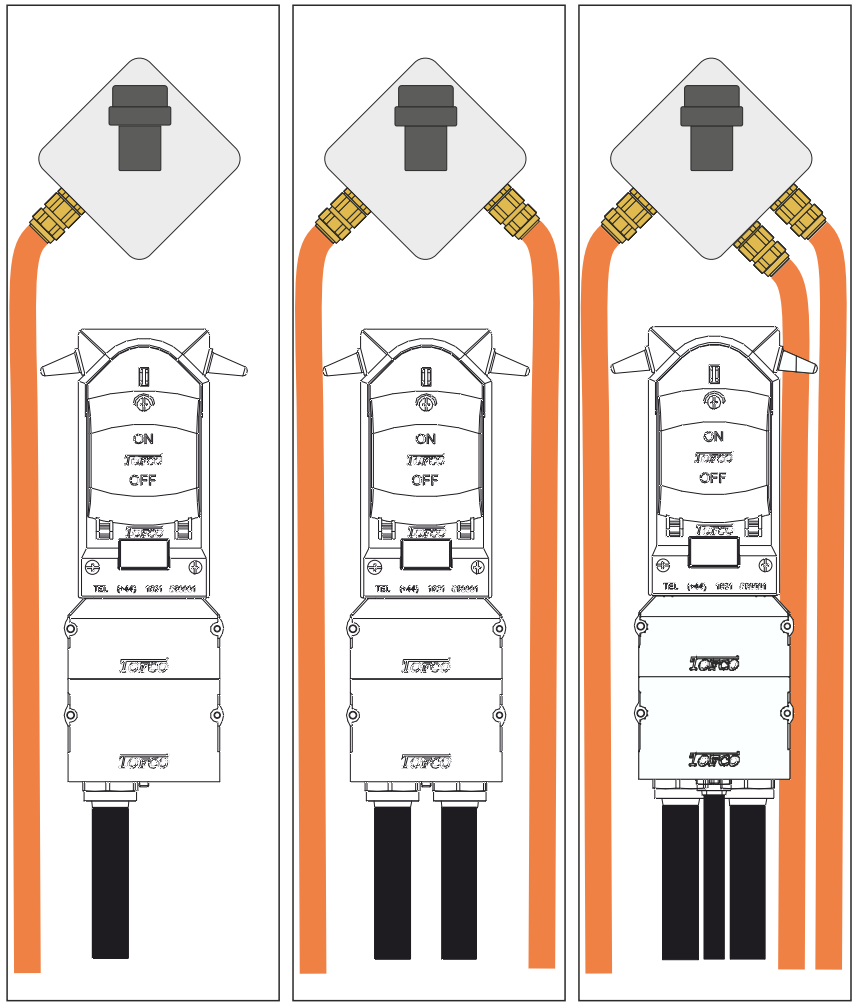

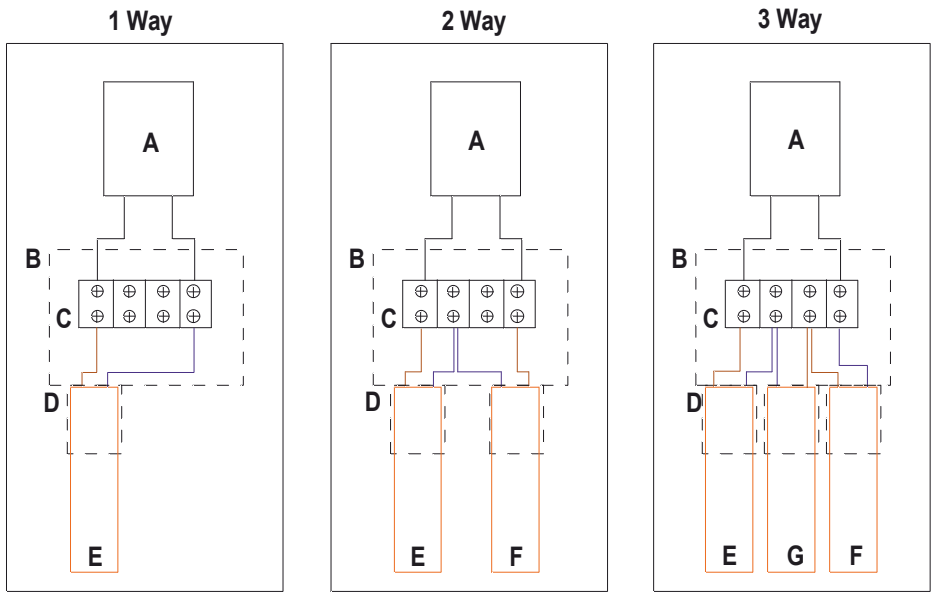

A - TOFCO Impact Sensor

B - IP 68 Enclosure

C - Terminal Blocks

D - SWA Gland 20S

E - Incoming SWA Sensor Cable

F - Outgoing SWA Sensor Cable

G - Spur SWA Sensor Cable

REVISION No.	DESCRIPTION OF MODIFICATION	DATE

PART No.
TOFCO Impact Sensors

THIS DOCUMENT IS THE PROPERTY OF TOFCO CPP LIMITED AND IS SUPPLIED IN CONFIDENCE. IT MUST NOT BE USED FOR ANY OTHER PURPOSE OTHER THAN THAT FOR WHICH IT IS SUPPLIED, AND MUST NOT BE REPRODUCED WITHOUT PERMISSION IN WRITING FROM THE OWNER.

DRAWING TITLE:
TOFCO Impact Sensors

SHEET	DRAWN	CHECKED	APPROVED	DATE
1 of 1	JP	JP	JP/KD	03/04/20

DRAWING No.
PAD TIS001

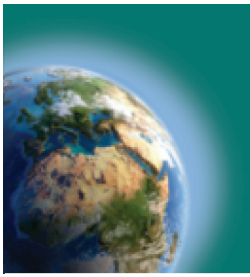

CLEVELAND CABLE COMPANY

A WORLD POWER IN CABLE SUPPLY

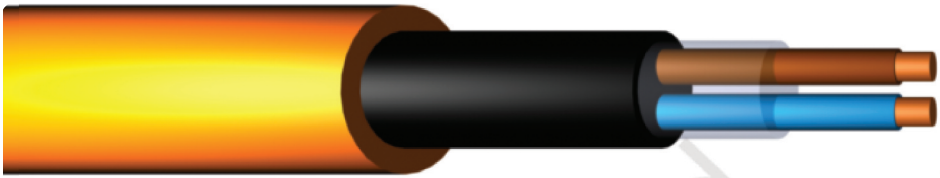

TRAFFIC SIGNALLING CABLES

LOOP FEEDER CABLE NON ARMOURED

Plain annealed solid copper conductors, polyethylene insulated, polyethylene outer sheath, colour orange, 600/1000v grade.

CCC Code	Conductor Size (mm^2)	Stranding (mm)	No. Of Cores	Weight (Kg/Km)	Overall Diameter (mm)	Gland Size (mm)
LOOP2X1/5	1.5	1/1.38	2 (1pr)	80	9.00	20S
LOOP4X1/5	1.5	1/1.38	4 (2pr)	123	9.10	20S
LOOP2X2/5	2.5	1/1.78	2 (1pr)	110	9.30	20S
LOOP4X2/5	2.5	1/1.78	4 (2pr)	180	10.70	20S

Temperature limits:
-15 to +70°C.

*Bending radius:
6 x overall diameter.

Core identification:
2 core - Brown, Blue
4 core - Brown, Black, Grey, Blue.

Should not be installed at temperatures below 0°C.

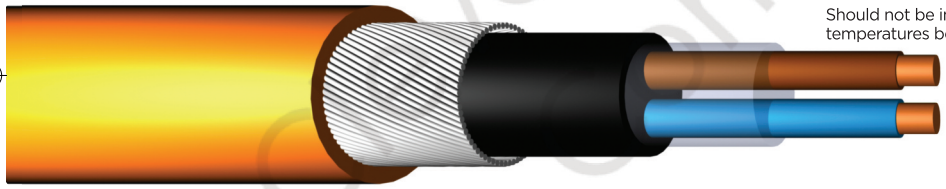

LOOP FEEDER CABLE ARMOURED

Plain annealed solid copper conductors, polyethylene insulated, polyethylene bedding, galvanised steel wire armour, polyethylene outer sheath. Generally to BS6346/87. Outer sheath colour: Orange. 600/1000 volts grade.

CCC Code	Conductor Size (mm^2)	Stranding (mm)	No. Of Cores	Weight (Kg/Km)	Overall Diameter (mm)	Gland Size (mm)
LOOP2X1/5SWA	1.5	1/1.38	2 (1pr)	235	11.80	20S
LOOP4X1/5SWA	1.5	1/1.38	4 (2pr)	300	12.70	20S
LOOP2X2/5SWA	2.5	1/1.78	2 (1pr)	279	12.50	20S
LOOP4X2/5SWA	2.5	1/1.78	4 (2pr)	383	15.00	20

Temperature limits:
-15 to +70°C.

*Bending radius:
6 x overall diameter.

Core identification:
2 core - Brown, Blue
4 core - Brown, Black, Grey, Blue.

Should not be installed at temperatures below 0°C.

LOOP DETECTOR CABLE

Tinned flexible copper conductor, ethylene propylene rubber insulated (EPR), polychloroprene sheathed (PCP), 600/100v generally to BS6500 + BS6195, sheath colour black.

CCC Code	Conductor Size (mm^2)	Stranding (mm)	No. Of Cores	Weight (Kg/Km)	Overall Diameter (mm)	Gland Size (mm)
LOOP1/5	1.5	30/.025	1	53.8	7.00	20S
LOOP2/5	2.5	50/0.25	1	64.0	7.90	20S

Temperature limits:
-30 to +85°C.

*Bending radius: 6 x overall diameter.

Should not be installed at temperatures below -25°C.

Please note that gland and cleat sizes are intended to be indicative and may vary according to different manufacturers tolerances.

*All bending radii shown are indicative only as each individual manufacturer has their own criteria for their product. Specification of the minimum bending radius (MBR) of cables is not referred to in cable standards. This is a manufacturer declaration, based on their own judgement and experience of the capabilities of their cable, it is not a specification defined in standards.

Cleveland Cable Company